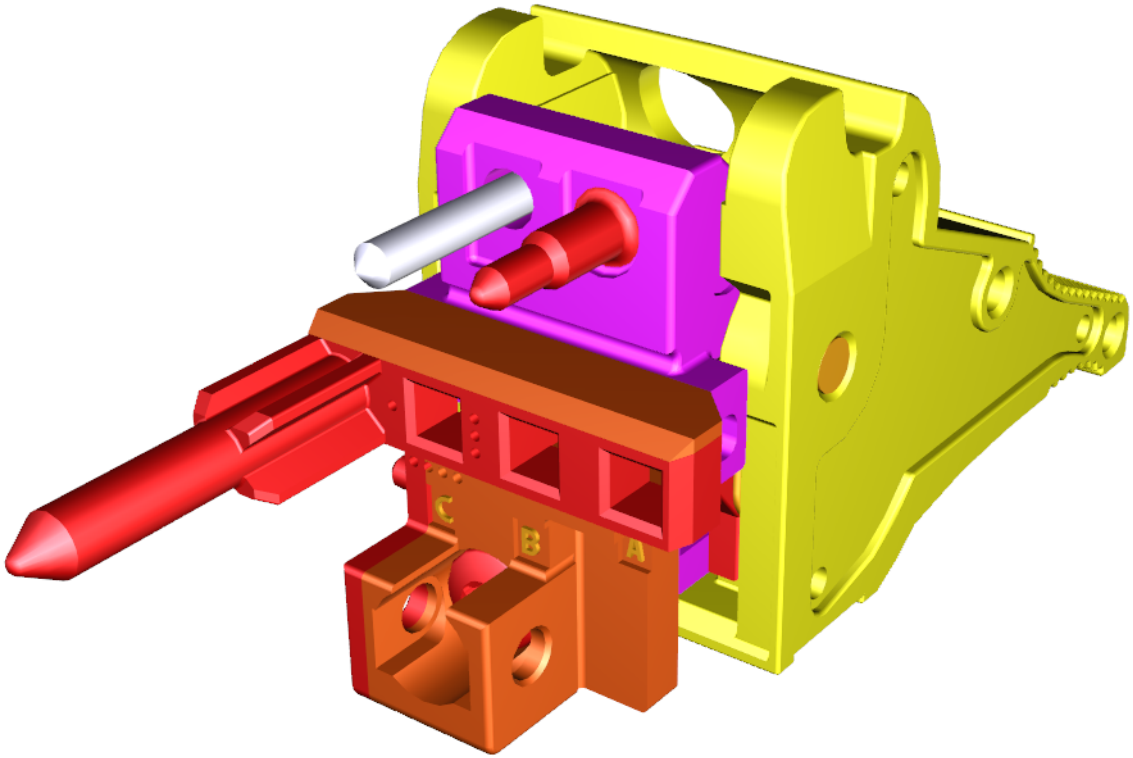
C
B
A